S DRAWING IS THE PROPERTY OF
ERRY–BURRELL. THE INFORMATION
NTAINED HEREON IS CONFIDENTIAL
) MUST NOT BE COPIED OR DISCLOSED
OTHERS UNLESS AUTHORIZED BY
ERRY–BURRELL CORPORATION.

SSEL TOLERANCES
ESS OTHERWISE SPECIFIED

STRAIGHTNESS ·····	+/– 1/2 DEG.
INGS STRAIGHTNESS ·	+/– 1/2 DEG.
INGS LOCATION ·····	+/– 1/4" RADIAL
	+/– 1 DEG. ANGULAR
CIRCLE ·····	+/– 1/4" RADIAL
	+/– 1 DEG. ANGULAR

E-271-90

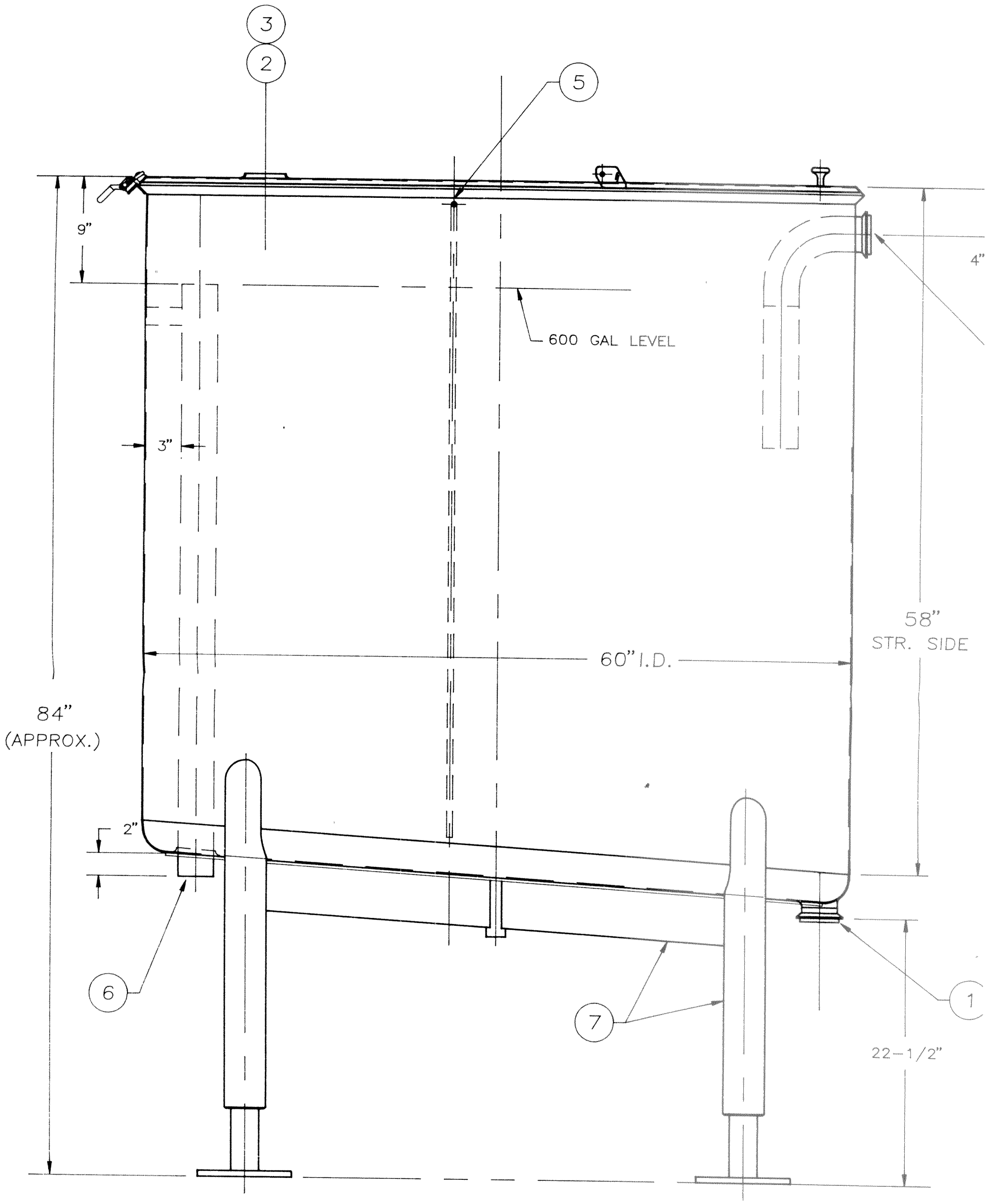

ELEVATION
FOR ORIENTATION